Altech by els spelsberg

Standard Features

- **Protection Level:** IP65
- **Technical:** Fits 42 Circuit Breaker Poles (14 per section)
  Knockout Sidewalls and installed double membrane seals
  Tinted Transparent Door
  Multiple Enclosure Combination Option
- **UL Recognized**
  Enclosure Material: Polycarbonate
- **Door Material:** Polycarbonate
- **Gasket Material:** Polyurethane
- **Material**
  Temperature Range: Polystyrene
  -40˚C to 70˚C (-40˚F to 158˚F)
  Polycarbonate
  -40˚C to 120˚C (-40˚F to 248˚F)
- **Color:** Light Gray
- **Included Accessories:** (4) DIN Rails, Cable Shield, Filler Strips, (3) Label Strips,
  (15) M20 Double Membrane Seals, (2) M25 Double Membrane Seals,
  (1) M32 Double Membrane Seals, (1) M40 Entry Spout,
- **Accessories:** See section below

AK 42+1

Ordering Information	Cat. No.	Type	Dimensions mm (in) Length	Width	Height	Std. Pk.
Polycarbonate						
Enclosure	738-442	AKi42+1	750 mm (29.53 in)	300 mm (11.81 in)	142 mm (5.59 in)	1

Accessories

Ordering Information	Cat. No.	Type	Std. Pk.
Key Lock	706-102	KL2	1
Mounting Plate – 240 x 112 mm	795-001	MPI 1	1
Mounting Plate – 240 x 240 mm	795-002	MPI 2	1
Mounting Plate – 240 x 390 mm	795-003	MPI 3	1
Mounting Plate – 240 x 540 mm	795-004	MPI 4	1
DIN Rail - 216 mm Surface Mounted	795-030	NS35-216/3	1
Hinge Kit Set	190-005	HK2	1
Mounting Tab Kit (metal)	793-004	MT2	1
Filler Strip	799-012	108 mm piece (6 divisions)	1
2x27 Pole Ground/Neutral Terminal Strip (6 screw clamps 2.5-16mm², 21 spring clamps 1.5-4mm² each)	790-327	AK28PE/N-SL	1

Please refer to pages 149-152 for additional accessories and detailed information.

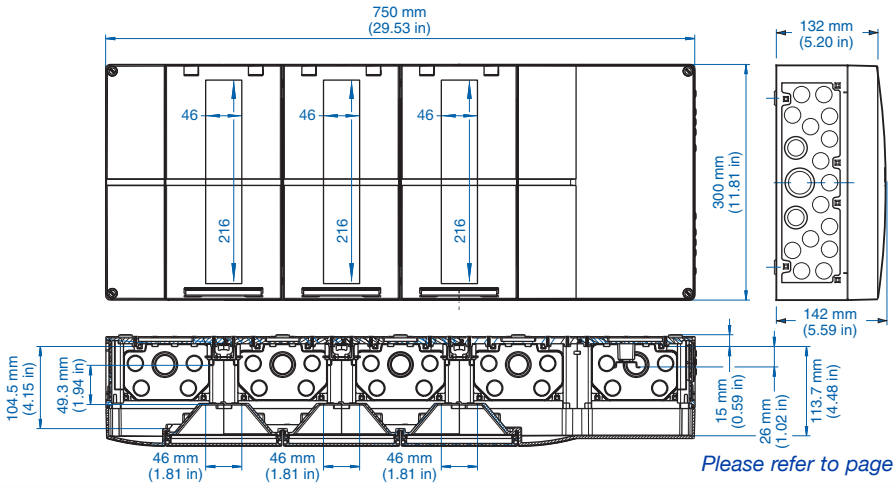

Please refer to page 158 for Knockout details.